Lahore University of Management Sciences

Direct Observation of Geometrical phase

[Ways of observing Berry's phase in different geometrical configurations]

Joveria Baig

12100130

Mehr-un-nisa Shahid

12100120

Abstract

Geometrical phase has been known in classical mechanics for a long time. Several manifestations of geometric phase in optics have been discovered, however few experiments have been reported for direct experimental verification of berry's topological phase. In this report, we start by reproducing previous work on the observation of optical activity of laser in different configurations of a single mode fiber, but then we go on to demonstrate the phase accumulated in a helically wound fiber. The experiment is configured for any state of polarization of incident beam and results are analyzed using Stokes geometry and the concept of Poincare Sphere.

Keywords: *anholonomy, parameter space, dynamic phase, hannay angle, stokes parameters, Poincare sphere*

Contents at a glance…

1. Introduction

1.1: Introduction to geometric phase

Geometric phase has been reported repeatedly over the last two hundred years in classical mechanics by various physicists from Berry's analysis of dynamical systems in 1984 [1] to Akira Tomita and Raymond Chiao's experimental verification in 1986 [2]. Geometric phases arise in a number of physical systems, both classical and quantum. They result from an *anholonomy* in systems. *Holonomy*, in classical dynamics, refers to a situation where the constraints on a system can be integrated to reduce the number of degrees of freedom [3]. Constraints that are independent and thus cannot be integrated are called anholomic. If a vector is moved on a curved surface, the direction of vector changes as it comes back to the same position. Vectors that experience this anholomic effect cause the existence of geometric phase.

Geometric phase is the phase that a physical system acquires when it travels a path in *parameter space* or state space [4]. Phase accumulated by a light travelling in real space can most general be attributed to either the time evolution of its Hamiltonian or its optical path length, expressed as a complex phase in its electric field expression [5]. This phase is called *dynamic phase*. Studies have showed that there is an additional phase that one must consider, associated with the geometry of the path in consideration. This phase is termed Berry's phase.

This phase has attracted works by several who classified it to be ubiquitous to dynamical systems. Although mainly a quantum mechanical phenomenon, there has been debate on its physical origin and is now been generalized to classical systems where it is called the *Hannay* angle [6].

Classically, if a vector is parallel transported around a closed circuit on a curved space, it returns with its orientation altered. Figure 1.1 shows the classical effect. In the figure, when the red vector is parallel transported through the 13 marked points around the sphere (all on a spherical triangle), the vector returns rotated. If the vector is considered as a 2-d object in the tangent space of the surface of the sphere, the rotation of the vector can be given by an angle. The angle that the vector is rotated by is proportional to the surface area of the spherical triangle. If the spherical triangle is built from three 90 degree angles, it is clear that the vector is rotated by 90 degrees, and, under the (correct) assumption that the rotation angle is proportional to the area of the spherical triangle [7], this tells us that the ratio of spherical triangle area to rotation angle is given by 1. That is, if the spherical triangle has surface area A, the vector will be rotated by the angle A.

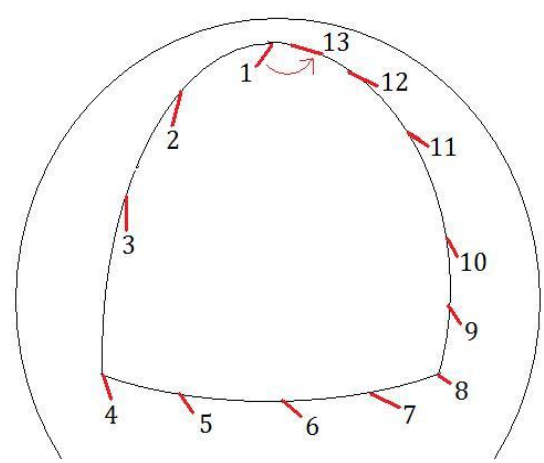

Fig 1.1 Origin of Berry's phase on a curved surface

When a quantum system evolves so that it returns to its initial physical state, it acquires a 'memory' of this motion in the form of a geometric phase in the wave function. Although this phase has been reported in many different areas, one of the prominent ones is the area of optics. Potential applications are already visible by investigating the phase accumulated in various geometries. It has been used for determination of 3D

structures and can potentially be used in biophotonics applications. This report will discuss experimental verification of the phase accumulated in various geometries.

1.2: Theoretical Background:

1.21: Stokes parameters

Stokes parameters are a set of values that represent polarization of light. These parameters can then be mapped onto the Poincare sphere which can be used to analyze changes in state of polarization after passing through different configurations [8]. Stokes parameters cannot be measured directly and thus have to be related to intensities. To derive the Stokes parameters, one can take the time average of the polarization ellipse:

$$\frac{E(z,t)^2}{E_{0x}^2} + \frac{E(z,t)_y^2}{E_{0y}^2} - \frac{2E(z,t)_x E(z,t)_y}{E_{0x}E_{0y}} cos\delta = sin^2\delta \qquad 1.211$$

Time average is given by:

$$\langle E(z,t)_i | E(z,t)_j \rangle = \lim_{T\to\infty} \frac{1}{T}\int_0^T E(z,t)_i E(z,t)_j \, dt, \quad i,j = x,y, \qquad 1.212$$

When this time average is applied to the polarization eclipse, it yields:

$$S_0^2 = S_1^2 + S_2^2 + S_3^2$$

Where,

$$S_0 = E_{0x}^2 + E_{0y}^2$$

$$S_1 = E_{0x}^2 - E_{0y}^2$$

$$S_2 = 2E_{0x}E_{0y} cos\delta$$

$$S_3 = 2E_{0x}E_{oy} sin\delta, \qquad \delta = \delta_y - \delta_x$$

These stokes parameters can be used to describe the polarization of light since they describe the left handedness, horizontal component and 45 degree component of a light vector. The first Stokes parameter S_0 describes the total intensity of the optical beam; the second parameter S_1 describes the preponderance of LHP light over LVP light; the third parameter S_2 describes the preponderance of L+45P light over L-45P light and, finally, S_3 describes the preponderance of RCP light over LCP light[9].

Stokes parameters are calculated using the readings taken,

$$S_0 = 2I_0$$

$$S_1 = 2I_1 - 2I_0$$

$$S_2 = 2I_2 - 2I_0$$

$$S_3 = 2I_3 - 2I_0$$

Where,

I0 = intensity at the output without placing anything in between (natural irradiance taking into account losses due to polarizer)

I1 = intensity at the output after horizontal polarizer

I2 = intensity at the output 45 degree polarizer

I3 = intensity at the output after 135 degree polarizer

1.22 Poincare Sphere

The method of Poincare sphere, proposed by Henry Poincare in 1981-1982 [5], is a very convenient way to represent polarization of light by parameterization of the last three Stokes parameters in spherical coordinates [10] .This method is graphical and allows prediction in change of polarization by any polarization device.

Let us now consider the method of Poincare sphere to better understand the concept of berry's phase. Figure 1.22 classifies different points on the sphere corresponding to different states of polarization.

The upper pole and lower pole represents right and left circularly polarized light and the equator points to linear polarization. All other points correspond to elliptic polarization. Diametrically opposite points on the equator correspond to horizontal and vertically polarized light. Therefore orthogonal polarizations can be represented by diametrically opposite points on a Poincare sphere [11]. These points (longitude and latitude) are located on the Poincare sphere using these equations:

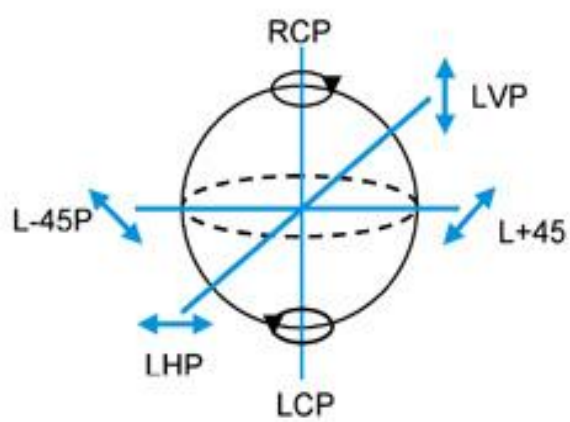

Figure 1.22: Different states of polarization on Poincare sphere

$$I = S_0$$

$$p = \frac{\sqrt{S_1^2 + S_2^2 + S_3^2}}{S_0}$$

$$2\psi = \mathrm{atan}\frac{S_2}{S_1}$$

$$2\chi = \mathrm{atan}\frac{S_3}{\sqrt{S_1^2 + S_2^2}}$$

Using the above equations, a point can be located on a Poincare sphere which determines its state of polarization. If the starting point and the end point are known, the path can be traced out to find out the change in polarization. This is further explained in Section 3 in the context of berry's phase.

2. Experimental Setup

2.1 EXISTING DESIGNS:

The already published papers on this subject proposed a few design considerations to observe the presence of berry's phase in single mode fibers. The first demonstration of the coiled light geometric phase was observed by sending an optical beam through a helically wound single mode fiber. The experiment involved measuring the difference in polarization of a linearly polarized light through an optical fiber [12]. These experiments reported by Ross (1) and yet again by Varnham, birch and Payne (2) treated the case for a uniform helix by classical analysis using differential geometry [13].

A few years later, the topological nature of Berry's phase, i.e. the phase accumulated is independent of the fiber path if the solid angle subtended stays constant, however was first verified by Akira Tomita and Raymond Chiao [14]. Their experiment involved use of a He-Ne laser and a pair of linear polarizer, one at the output and the other at the input end of the fiber to measure the rotation of polarization through a conventional step index type profile fiber inserted loosely in a teflon sleeve and helically wound on a cylinder.

Few experiments had been reported for the observation of Berry's phase for the photon due to difficulty in configuring suitable experiments. Therefore, to explain this quantum mechanical phenomenon using the quantum theory, Paramasivam and Brian Culshaw [15] came up with design of a Sagnac interferometer with a left handed coil and an exact replica right handed coil installed in each of its arms. This showed that the optical activity in a helical fiber coil is cancelled when the helicity of the light is reversed at a mirrored surface.

2.2 PROPOSED DESIGN:

Taking the above experimental procedures into account, there was a need for demonstration of geometric phases in different geometrical patterns (from the straight to a cubical and then a coiled configuration). For this purpose a He-Ne laser was coupled to a single mode fiber wrapped in different configurations to study the changes in parameters introduced by the fiber.

2.21 USE OF A SINGLE MODE OVER A MULTI MODE FIBER:

To check if the experiment could be carried out using a multimode fiber instead of a single mode fiber, a He-Ne 633nm wavelength was incident on to the fiber. The fiber could couple most of the light through it, however it could not sustain it for more than a meter length, thereby giving a speckle pattern at the output (refer to figure 2). SMF, on the other hand gave a lower loss and high bandwidth with coupling preserved for more than two meters and therefore SMF was used for design.

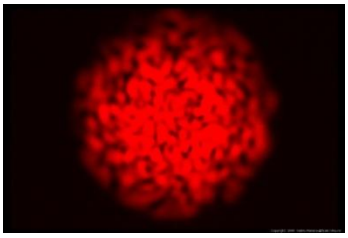

2.22 COUPLING THE LASER THROUGH A FIBER:

COLLIMATING OUT OF THE FIBER:

For this purpose, a fiber source was connected to the bulkhead of the fiber port and the output was examined. The XY screws were adjusted to center the output beam at the aperture (refer to Figure 1 for the positioning of screws). For a converging beam, the socket head cap screws (SHCS) were turned in equal clockwise increments and vice versa for the diverging beam [16].

COUPLING INTO THE FIBER:

An optical detector was attached to the end of the fiber not connected to the port. Since the light was collimated therefore some light was already coupled into the fiber (of the order of 10um). The output signal was then maximized using the X-Y position screws till any further adjustment did not produce a significant change. Then, by starting at any SHCS on the face of the Fiber port, screws were adjusted to get maximum output signal by moving to the next SHCS in clockwise direction. This was repeated several times till a considerable reading (of about 1.211mW) was obtained. (Refer to figure 1 for positioning of screws on the fiber port)

2.3 EXPERIMENT:

Experiment was performed using a mounted 633nm polarized HeNe laser which was coupled into a SMF Cable (633/680 nm, 2 m Long) using a fiber port (f=4.6mm, 600-1050nm). Laser was coupled into the fiber to obtain maximum output using the procedure given in previous section.

2.31 Cubical configuration:

The fiber was first held in cubical configuration as shown in figure 2.31. The output intensity was measured using a Digital Power & Energy Meter (Si Sensor, 400-1100 nm, 50 nW - 50 mW) to measure the natural irradiance(I0).

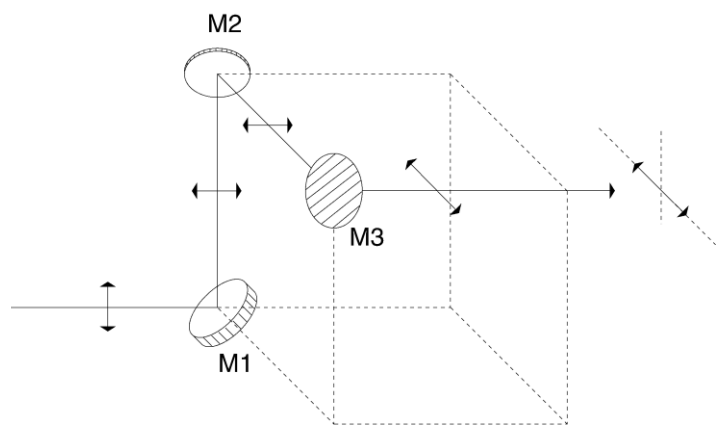

Fig 2.31: Fiber held in cubical configuration

To measure I1, a Linear Polarizer with N-BK7 Protective Windows (400-700 nm) was placed at 180 degrees to the incident beam. I2 was measured by placing a polarizer at 45 degrees to the incident beam and I3 was measured by a QWP placed between the beam and a polarizer at 135 degrees. (refer to figure 2.30 for details)

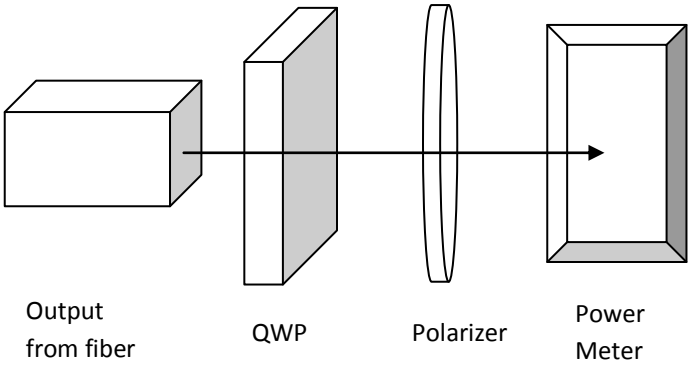

Measured parameter	Polarizer	QWP
I0	No	No
I1	At 180°	No
I2	At 45°	No
I3	At 135°	Yes

Figure 2.30 method to measure intensities for calculation of stokes parameters

2.32: fiber placed at 45 degrees to the output:

The fiber was then wound in a 45 degree configuration as shown in figure 2.32. The intensities were measured using the method described above (refer to fig 2.30)

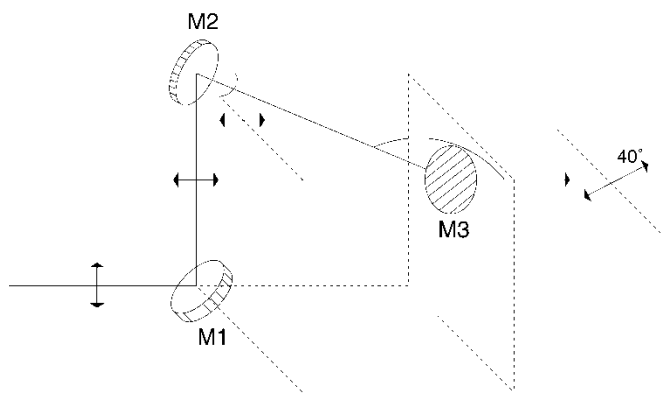

Fig 2.32 fiber in 45 degree configuration

2.33: Fiber in coiled configuration

The fiber was then twisted in a single turn to observe the phase introduced by turns of fiber as shown in figure 2.33. The intensities were again measured using the method described in fig 2.30. The results for these experiments are presented in the next section.

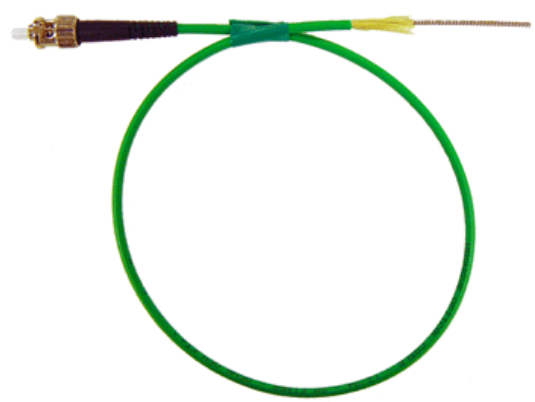

Fig 2.33 fiber in coiled configuration

3. Results and Analysis

3.1. Readings Obtained:

The experiment was performed for various configurations and results were explained using geometric optics.

CONFIGURATIONS	Intensities (in mW)			
	I0	I1	I2	I3
At the input	4.300	8.250	4.850	4.810
Straight fiber configuration	0.600	1.145	0.660	0.712
Fiber in cubical configuration	0.637	0.360	0.021	0.541
Fiber in 45 degree configuration (refer to figure 1)	0.637	0.628	1.272	0.660

Table 1.1 Table of intensities measured

Note: the above readings are taken after taking into account the losses in the polarizers and quarter wave plate. All intensities are in mW.

I0 = intensity at the output without placing anything in between (natural irradiance taking into account losses due to polarizers)

I1 = intensity at the output after horizontal polarizer

I2 = intensity at the output 45 degree polarizer

I3 = intensity at the output after 135 degree polarizer

3.20 Stokes parameters calculated:

Stokes parameters were calculated using the equations described above and were tabulated as shown below:

CONFIGURATIONS	Stokes Parameters (in mW)			
	S0	S1	S2	S3
At the input	8.600	7.900	1.200	1.100
Straight fiber configuration	1.200	1.090	0.120	0.221
Fiber in cubical configuration	1.274	-0.554	-1.230	-0.192
Fiber in 45 degree configuration (refer to figure 1)	1.270	-0.105	1.270	-0.047

3.3 MAPPING ONTO THE POINCARE SPHERE:

To map the stokes parameters onto the poincare sphere, spherical coordiantes were calculated using equations 1.1

CONFIGURATIONS	Coordinates on poincare sphere			
	I(mW)	p	2Ψ	2χ
At the input	8.600	0.918	0.151	0.200
Straight fiber configuration	1.200	0.929	0.110	1.202
Fiber in cubical configuration	1.274	1.070	165.8	-2.370
Fiber in 45 degree configuration (refer to figure 1)	1.274	1.004	89.52	-2.096

3.4 Analysis:

The coordinates calculated above were then mapped onto the poincare sphere:

Figure 1.4:

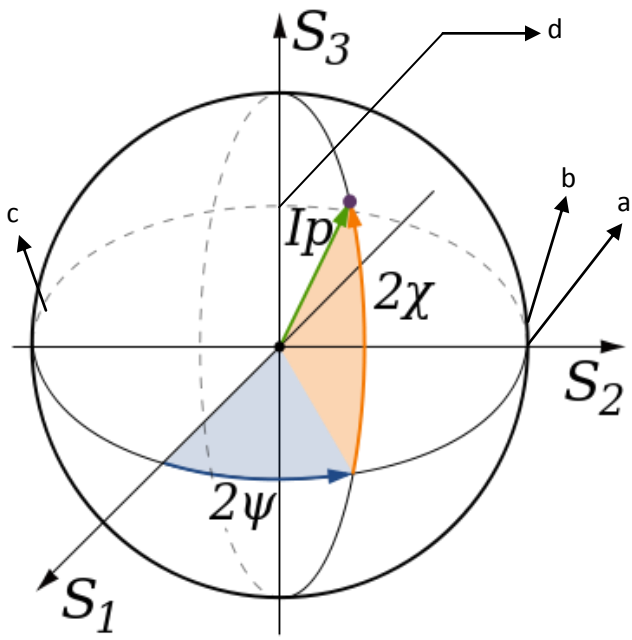

Point a: shows the polarization of the input light (2Ψ=0.151 and 2χ=0.200). The polarization is and horizontal linear

Point b: shows the state of polarization after through a straight fiber. The polarization is still and approximately unchanged passing linear

Point c: shows the polarization of ligt after through a cubical configuration. It now becomes vertically polarized (2Ψ=165.8 and 2χ=-2.37) passing

Point d: shows state ofpolarization after passing through the 45 degree configuration. Polarization is still linearly polarized but now at 45 degrees.

4. Conclusion and references

4.1 Conclusion:

Our studies on Berry's phase largely showed that phase accumulated when a light passes through a fiber is not only dependant on its optical path length or the so called dynamical phase but is also affected by the geometry of the fiber. Also, since it is purely geometrical in origin, therefore it gives it an edge over dynamical phase in that it is inherently unbounded, that is, it can be increased indefinitely. Conversely, it is not absolute. That is, it has no memory of a previous phase, like a dynamic phase has. This form of phase has a lot of applications ranging from frequency shifters to interferometers. For example, a unique aspect of geometric phase is its non-linearity for certain paths. This has been used in super sensitive polarization interferometry and optical switching.

4.2 Future prospects:

Geometric phase has been found to be a fertile ground for applications in optics and bio photonics. Its unique characteristics make this phase a solid alternative to dynamical phases [17]. As a bonus this comes as a form of analysis that relies on geometrical constructions, which makes it a simple framework for design of new devices and applications. Since geometrical phase depends on trajectories in parameter or state space, a new dynamical setting can lead to its application for new fields in optics. Geometric phase is indeed boundless!

Acknowledgements:

We would like to thank **Dr Mumtaz Sheikh** for his mentoring and supervision and his research assistant **Naveed Bin Qasim** for his constant support and guidance. We are also extremely grateful to the physics Lab staff for their constant help throughout the project.

References:

[1] Berry, M.V., 1984, Proc. R. Soc. Lond. A,392,45

[2] Observation of Berry's topological phase by using an optical fiber, Akira Tomita, phys rev lett v57, n8, 1986

[3] D. Greenwood, Classical Dynamics (Dover, 1977)

[4] Spin Orbit interaction of a photon in an inhomogeneous medium, B. Ya Zeldovich, phys lett v46, 1992

[5] Application of Geometric Phase in Optics, Enrique Galvez, Colgate University, 1986

[6] D.B. Mortimore, J. Light wave Technology 6, 1217 (1988)

[7] C.A. Millar I.D. Miller, D.B. Mortimore, B.J. Ainslie, P.Uruqhart, Proc Inst. Electr. Eng Part J 135,303

[8] Bhandari, and R..Dasgupta T., 1990 Phys Lett A, 143, 170

[9] Berry, M.V 1987 J.Mod. Opt 34,1401

[10] Chiao, R.Y, Jordan T.F. 1988, Phys Lett. A 132,77

[11] Gerry, Ch C., 1989, Phys Lett. A, 132,77

[12] A. Tomita and R.Y Chiao "Manifestation of Berry's Topological Phase for the photon", Phys rev Lett 57

[13] E. Collet, Field Guide to polarization, SPIE Field Guides, vol FG05, ISBN 0-8194-5868-6

[14] Geometric Phase in Molecular System, Daniel. A.Brue, dated: April 21, 2005

[15] Use of Poincare sphere in polarization optics and classical and quantum mechanics review, v48, 1997

[16] Thor Labs Manual for a fiber port
